Please check the examination details below before entering your candidate information

Candidate surname	Other names

Pearson Edexcel International Advanced Level

Centre Number | Candidate Number

Wednesday 22 May 2019

Morning (Time: 2 hours 30 minutes) | Paper Reference **WMA01/01**

Mathematics

International Advanced Subsidiary/Advanced Level
Core Mathematics C12

You must have:
Mathematical Formulae and Statistical Tables (Blue), calculator

Total Marks

Candidates may use any calculator permitted by Pearson regulations. Calculators must not have the facility for symbolic algebra manipulation, differentiation and integration, or have retrievable mathematical formulae stored in them.

Instructions

- Use **black** ink or ball-point pen.
- If pencil is used for diagrams/sketches/graphs it must be dark (HB or B).
- **Fill in the boxes** at the top of this page with your name, centre number and candidate number.
- Answer **all** questions and ensure that your answers to parts of questions are clearly labelled.
- Answer the questions in the spaces provided – *there may be more space than you need.*
- You should show sufficient working to make your methods clear. Answers without working may not gain full credit.
- Inexact answers should be given to three significant figures unless otherwise stated.

Information

- A booklet 'Mathematical Formulae and Statistical Tables' is provided.
- There are 16 questions in this question paper. The total mark for this paper is 125.
- The marks for **each** question are shown in brackets – *use this as a guide as to how much time to spend on each question.*

Advice

- Read each question carefully before you start to answer it.
- Try to answer every question.
- Check your answers if you have time at the end.
- If you change your mind about an answer, cross it out and put your new answer and any working underneath.

Turn over ▶

©2019 Pearson Education Ltd.

P 5 5 8 5 8 A 0 1 5 2

Pearson

Leave blank

Answer ALL questions. Write your answers in the spaces provided.

1. The 4th term of a geometric series is 125 and the 7th term is 8

(a) Show that the common ratio of this series is $\frac{2}{5}$

(2)

(b) Hence find, to 3 decimal places, the difference between the sum to infinity and the sum of the first 10 terms of this series.

(4)

DO NOT WRITE IN THIS AREA
DO NOT WRITE IN THIS AREA
DO NOT WRITE IN THIS AREA

DO NOT WRITE IN THIS AREA
DO NOT WRITE IN THIS AREA
DO NOT WRITE IN THIS AREA

Leave blank

Question 1 continued

Q1

(Total 6 marks)

Leave blank

2. (a) Find the value of a and the value of b for which $\dfrac{8^x}{2^{x-1}} \equiv 2^{ax+b}$

(3)

(b) Hence solve the equation $\dfrac{8^x}{2^{x-1}} = 2\sqrt{2}$

(3)

DO NOT WRITE IN THIS AREA DO NOT WRITE IN THIS AREA DO NOT WRITE IN THIS AREA

DO NOT WRITE IN THIS AREA
DO NOT WRITE IN THIS AREA
DO NOT WRITE IN THIS AREA

Leave blank

Question 2 continued

Q2

(Total 6 marks)

Leave blank

3.

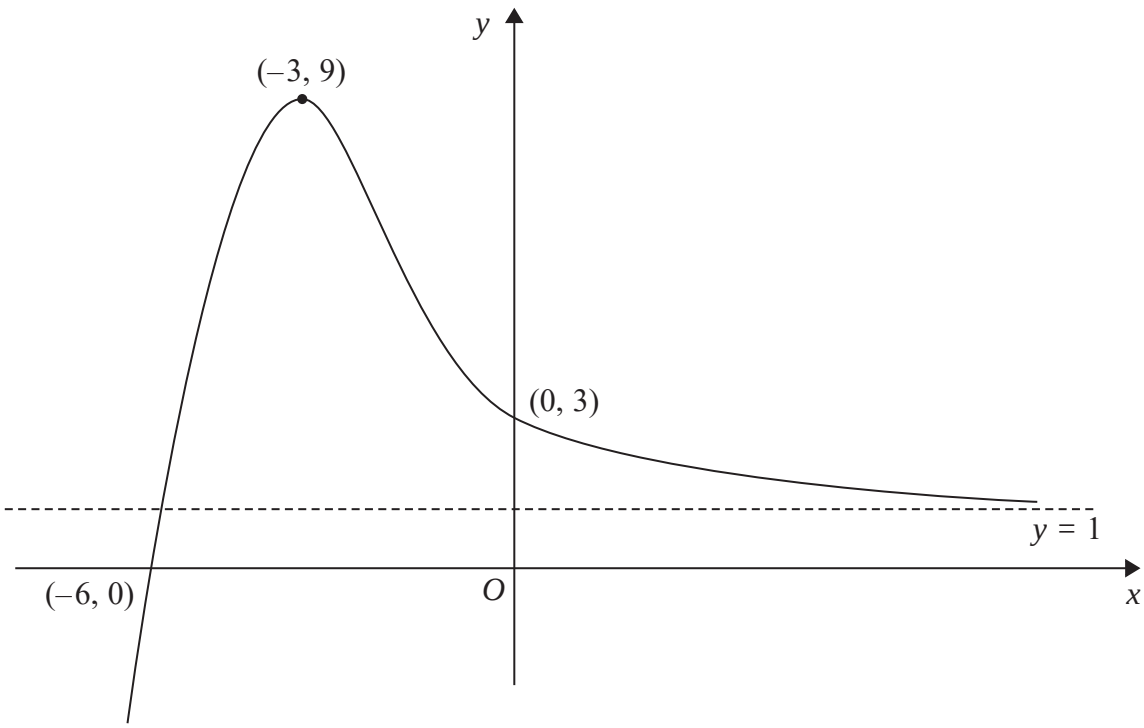

Figure 1

Figure 1 shows a sketch of part of the curve with equation $y = \mathrm{f}(x)$.
The curve crosses the coordinate axes at the points (–6, 0) and (0, 3), has a stationary point at (–3, 9) and has an asymptote with equation $y = 1$

On **separate** diagrams, sketch the curve with equation

(a) $y = -\mathrm{f}(x)$

(3)

(b) $y = \mathrm{f}\left(\frac{3}{2}x\right)$

(3)

On each diagram, show clearly the coordinates of the points of intersection of the curve with the two coordinate axes, the coordinates of the stationary point, and the equation of the asymptote.

DO NOT WRITE IN THIS AREA
DO NOT WRITE IN THIS AREA
DO NOT WRITE IN THIS AREA

DO NOT WRITE IN THIS AREA
DO NOT WRITE IN THIS AREA
DO NOT WRITE IN THIS AREA

Leave blank

Question 3 continued

Q3

(Total 6 marks)

Leave blank

4. Given that

$$y = 5x^2 + \frac{1}{2x} + \frac{2x^4 - 8}{5\sqrt{x}} \qquad x > 0$$

find $\frac{dy}{dx}$, giving each term in its simplest form.

(6)

DO NOT WRITE IN THIS AREA
DO NOT WRITE IN THIS AREA
DO NOT WRITE IN THIS AREA

DO NOT WRITE IN THIS AREA
DO NOT WRITE IN THIS AREA
DO NOT WRITE IN THIS AREA

Leave blank

Question 4 continued

Q4

(Total 6 marks)

Leave blank

5. A sequence $u_1, u_2, u_3, \ldots$ is defined by

$$u_1 = 1$$
$$u_{n+1} = k - \frac{8}{u_n} \qquad n \geqslant 1$$

where k is a constant.

(a) Write down expressions for u_2 and u_3 in terms of k.

(2)

Given that $u_3 = 6$

(b) find the possible values of k.

(4)

DO NOT WRITE IN THIS AREA DO NOT WRITE IN THIS AREA DO NOT WRITE IN THIS AREA

DO NOT WRITE IN THIS AREA
DO NOT WRITE IN THIS AREA
DO NOT WRITE IN THIS AREA

Leave blank

Question 5 continued

Q5

(Total 6 marks)

Leave blank

6. (a) Find, in ascending powers of x, up to and including the term in x^3, the binomial expansion of

$$\left(1 + \frac{1}{4}x\right)^{12}$$

giving each term in its simplest form.

(4)

(b) Hence find the coefficient of x in the expansion of

$$\left(3 + \frac{2}{x}\right)^2 \left(1 + \frac{1}{4}x\right)^{12}$$

(4)

DO NOT WRITE IN THIS AREA DO NOT WRITE IN THIS AREA DO NOT WRITE IN THIS AREA

DO NOT WRITE IN THIS AREA
DO NOT WRITE IN THIS AREA
DO NOT WRITE IN THIS AREA

Leave blank

Question 6 continued

Leave blank

Question 6 continued

DO NOT WRITE IN THIS AREA
DO NOT WRITE IN THIS AREA
DO NOT WRITE IN THIS AREA

DO NOT WRITE IN THIS AREA
DO NOT WRITE IN THIS AREA
DO NOT WRITE IN THIS AREA

Leave blank

Question 6 continued

Q6

(Total 8 marks)

Leave blank

7. (a) Sketch the graph of $y = \sin\left(x + \frac{\pi}{6}\right)$, $\quad 0 \leqslant x \leqslant 2\pi$

Show the coordinates of the points where the graph crosses the x-axis.

(3)

The table below gives corresponding values of x and y for $y = \sin\left(x + \frac{\pi}{6}\right)$.

The values of y are rounded to 3 decimal places where necessary.

x	0	$\frac{\pi}{8}$	$\frac{\pi}{4}$	$\frac{3\pi}{8}$	$\frac{\pi}{2}$
y	0.5	0.793	0.966	0.991	0.866

(b) Use the trapezium rule with all the values of y from the table to find an approximate value for

$$\int_0^{\frac{\pi}{2}} \sin\left(x + \frac{\pi}{6}\right) \mathrm{d}x$$

Give your answer to 2 decimal places.

(4)

DO NOT WRITE IN THIS AREA
DO NOT WRITE IN THIS AREA
DO NOT WRITE IN THIS AREA

DO NOT WRITE IN THIS AREA
DO NOT WRITE IN THIS AREA
DO NOT WRITE IN THIS AREA

Leave blank

Question 7 continued

Leave blank

Question 7 continued

DO NOT WRITE IN THIS AREA
DO NOT WRITE IN THIS AREA
DO NOT WRITE IN THIS AREA

DO NOT WRITE IN THIS AREA
DO NOT WRITE IN THIS AREA
DO NOT WRITE IN THIS AREA

Leave blank

Question 7 continued

Q7

(Total 7 marks)

Leave blank

8.

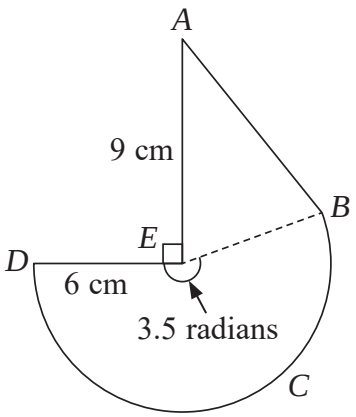

Diagram not drawn to scale

Figure 2

Figure 2 shows the design for a company logo. The design consists of a triangle *ABE* joined to a sector *BCDE* of a circle with radius 6 cm and centre *E*. The line *AE* is perpendicular to the line *DE* and the length of *AE* is 9 cm. The size of angle *DEB* is 3.5 radians, as shown in Figure 2.

(a) Find the length of the arc *BCD*.

(2)

Find, to one decimal place,

(b) the perimeter of the logo,

(4)

(c) the area of the logo.

(4)

DO NOT WRITE IN THIS AREA
DO NOT WRITE IN THIS AREA
DO NOT WRITE IN THIS AREA

DO NOT WRITE IN THIS AREA
DO NOT WRITE IN THIS AREA
DO NOT WRITE IN THIS AREA

Leave blank

Question 8 continued

Leave blank

Question 8 continued

DO NOT WRITE IN THIS AREA
DO NOT WRITE IN THIS AREA
DO NOT WRITE IN THIS AREA

DO NOT WRITE IN THIS AREA
DO NOT WRITE IN THIS AREA
DO NOT WRITE IN THIS AREA

Leave blank

Question 8 continued

(Total 10 marks)

Q8

Leave blank

9.

$$f(x) = (x + k)(3x^2 + 4x - 16) + 32, \qquad \text{where } k \text{ is a constant}$$

(a) Write down the remainder when $f(x)$ is divided by $(x + k)$.

(1)

When $f(x)$ is divided by $(x + 1)$, the remainder is 15

(b) Show that $k = 2$

(3)

(c) Hence factorise $f(x)$ completely.

(4)

DO NOT WRITE IN THIS AREA DO NOT WRITE IN THIS AREA DO NOT WRITE IN THIS AREA

DO NOT WRITE IN THIS AREA
DO NOT WRITE IN THIS AREA
DO NOT WRITE IN THIS AREA

Leave blank

Question 9 continued

Leave blank

Question 9 continued

DO NOT WRITE IN THIS AREA
DO NOT WRITE IN THIS AREA
DO NOT WRITE IN THIS AREA

DO NOT WRITE IN THIS AREA
DO NOT WRITE IN THIS AREA
DO NOT WRITE IN THIS AREA

Leave blank

Question 9 continued

Q9

(Total 8 marks)

Leave blank

10. The circle C has equation

$$x^2 + y^2 + 4x + py + 123 = 0$$

where p is a constant.

Given that the point (1, 16) lies on C,

(a) find

(i) the value of p,

(ii) the coordinates of the centre of C,

(iii) the radius of C.

(5)

(b) Find an equation of the tangent to C at the point (1, 16), giving your answer in the form $ax + by + c = 0$, where a, b and c are integers to be found.

(4)

DO NOT WRITE IN THIS AREA DO NOT WRITE IN THIS AREA DO NOT WRITE IN THIS AREA

DO NOT WRITE IN THIS AREA
DO NOT WRITE IN THIS AREA
DO NOT WRITE IN THIS AREA

Leave blank

Question 10 continued

Leave blank

Question 10 continued

DO NOT WRITE IN THIS AREA
DO NOT WRITE IN THIS AREA
DO NOT WRITE IN THIS AREA

DO NOT WRITE IN THIS AREA
DO NOT WRITE IN THIS AREA
DO NOT WRITE IN THIS AREA

Leave blank

Question 10 continued

Q10

(Total 9 marks)

Leave blank

11. The straight line l has equation $y = mx - 2$, where m is a constant.

The curve C has equation $y = 2x^2 + x + 6$

The line l does not cross or touch the curve C.

(a) Show that m satisfies the inequality

$$m^2 - 2m - 63 < 0$$

(3)

(b) Hence find the range of possible values of m.

(4)

DO NOT WRITE IN THIS AREA DO NOT WRITE IN THIS AREA DO NOT WRITE IN THIS AREA

DO NOT WRITE IN THIS AREA
DO NOT WRITE IN THIS AREA
DO NOT WRITE IN THIS AREA

Leave blank

Question 11 continued

Q11

(Total 7 marks)

Leave blank

12. (a) Show that

$$\frac{2 + \cos x}{3 + \sin^2 x} = \frac{4}{7}$$

may be expressed in the form

$$a \cos^2 x + b \cos x + c = 0$$

where a, b and c are constants to be found.

(3)

(b) Hence solve, for $0 \leqslant x < 2\pi$, the equation

$$\frac{2 + \cos x}{3 + \sin^2 x} = \frac{4}{7}$$

giving your answers in radians to 2 decimal places.

(*Solutions based entirely on graphical or numerical methods are not acceptable.*)

(5)

DO NOT WRITE IN THIS AREA
DO NOT WRITE IN THIS AREA
DO NOT WRITE IN THIS AREA

DO NOT WRITE IN THIS AREA
DO NOT WRITE IN THIS AREA
DO NOT WRITE IN THIS AREA

Leave blank

Question 12 continued

Leave blank

Question 12 continued

DO NOT WRITE IN THIS AREA
DO NOT WRITE IN THIS AREA
DO NOT WRITE IN THIS AREA

DO NOT WRITE IN THIS AREA
DO NOT WRITE IN THIS AREA
DO NOT WRITE IN THIS AREA

Leave blank

Question 12 continued

Q12

(Total 8 marks)

Leave blank

13. Given that $p = \log_a 9$ and $q = \log_a 10$, where a is a constant, find in terms of p and q,

(a) $\log_a 900$

(3)

(b) $\log_a 0.3$

(3)

DO NOT WRITE IN THIS AREA
DO NOT WRITE IN THIS AREA
DO NOT WRITE IN THIS AREA

DO NOT WRITE IN THIS AREA
DO NOT WRITE IN THIS AREA
DO NOT WRITE IN THIS AREA

Leave blank

Question 13 continued

Q13

(Total 6 marks)

Leave blank

14. The 5th term of an arithmetic series is $4k$, where k is a constant.

The sum of the first 8 terms of this series is $20k + 16$

(a) (i) Find, in terms of k, an expression for the common difference of the series.

(ii) Show that the first term of the series is $16 - 8k$

(6)

Given that the 9th term of the series is 24, find

(b) the value of k,

(2)

(c) the sum of the first 20 terms.

(3)

DO NOT WRITE IN THIS AREA DO NOT WRITE IN THIS AREA DO NOT WRITE IN THIS AREA

DO NOT WRITE IN THIS AREA
DO NOT WRITE IN THIS AREA
DO NOT WRITE IN THIS AREA

Leave blank

Question 14 continued

Leave blank

Question 14 continued

DO NOT WRITE IN THIS AREA
DO NOT WRITE IN THIS AREA
DO NOT WRITE IN THIS AREA

DO NOT WRITE IN THIS AREA
DO NOT WRITE IN THIS AREA
DO NOT WRITE IN THIS AREA

Leave blank

Question 14 continued

Q14

(Total 11 marks)

Leave blank

15.

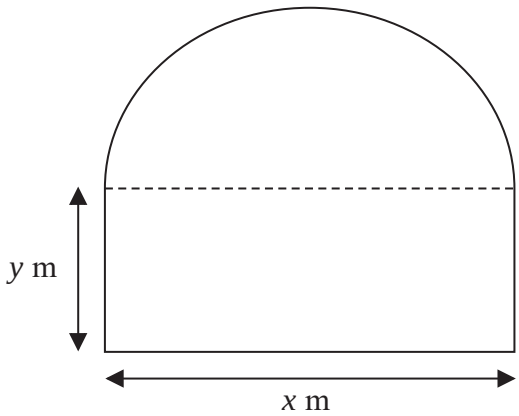

Diagram not drawn to scale

Figure 3

Figure 3 shows the plan view of a garden. The shape of this garden consists of a rectangle joined to a semicircle.

The rectangle has length x metres and width y metres.

The area of the garden is $100\,\text{m}^2$.

(a) Show that the perimeter, P metres, of the garden is given by

$$P = \frac{1}{4}x(4 + \pi) + \frac{200}{x} \qquad x > 0$$

(4)

(b) Use calculus to find the exact value of x for which the perimeter of the garden is a minimum.

(3)

(c) Justify that the value of x found in part (b) gives a minimum value for P.

(2)

(d) Find the minimum perimeter of the garden, giving your answer in metres to one decimal place.

(2)

DO NOT WRITE IN THIS AREA
DO NOT WRITE IN THIS AREA
DO NOT WRITE IN THIS AREA

DO NOT WRITE IN THIS AREA
DO NOT WRITE IN THIS AREA
DO NOT WRITE IN THIS AREA

Leave blank

Question 15 continued

Leave blank

Question 15 continued

DO NOT WRITE IN THIS AREA
DO NOT WRITE IN THIS AREA
DO NOT WRITE IN THIS AREA

DO NOT WRITE IN THIS AREA
DO NOT WRITE IN THIS AREA
DO NOT WRITE IN THIS AREA

Leave blank

Question 15 continued

(Total 11 marks)

Q15

Leave blank

16.

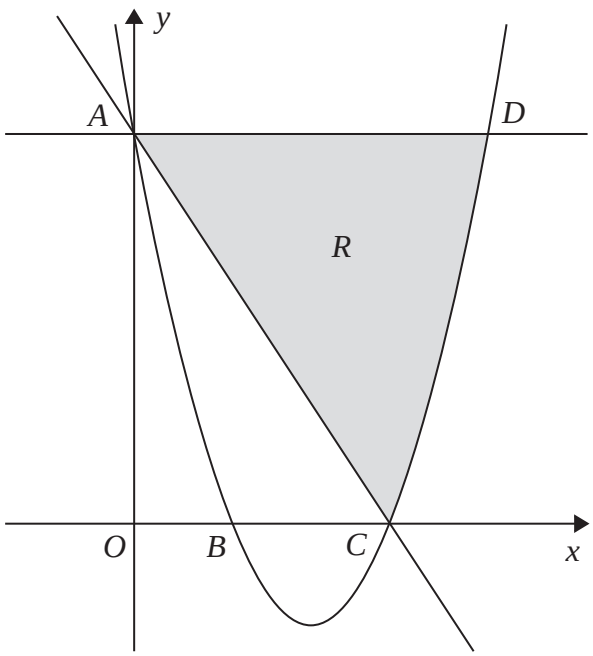

Figure 4

Figure 4 shows a sketch of the curve with equation $y = 2x^2 - 11x + 12$. The curve crosses the y-axis at the point A and crosses the x-axis at the points B and C.

(a) Find the coordinates of the points A, B and C.

(3)

The point D lies on the curve such that the line AD is parallel to the x-axis.

The finite region R, shown shaded in Figure 4, is bounded by the curve, the line AC and the line AD.

(b) Use algebraic integration to find the exact area of R.

(7)

DO NOT WRITE IN THIS AREA
DO NOT WRITE IN THIS AREA
DO NOT WRITE IN THIS AREA

DO NOT WRITE IN THIS AREA
DO NOT WRITE IN THIS AREA
DO NOT WRITE IN THIS AREA

Leave blank

Question 16 continued

Leave blank

Question 16 continued

DO NOT WRITE IN THIS AREA
DO NOT WRITE IN THIS AREA
DO NOT WRITE IN THIS AREA

DO NOT WRITE IN THIS AREA
DO NOT WRITE IN THIS AREA
DO NOT WRITE IN THIS AREA

Leave blank

Question 16 continued

Leave blank

Question 16 continued

Q16

(Total 10 marks)

TOTAL FOR PAPER: 125 MARKS

END

DO NOT WRITE IN THIS AREA
DO NOT WRITE IN THIS AREA
DO NOT WRITE IN THIS AREA